Name: _____

Rectangular Prisms with Fractional Edge Lengths

To visualize the volume of rectangular prisms with fractional edge lengths, you must follow at least two steps.

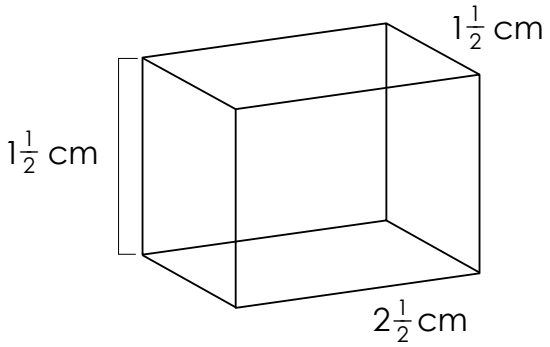

1. Determine how many fractional unit cubes fit inside a whole unit cube.

The prism's dimensions

2. Determine how many fractional unit cubes fit inside the rectangular prism.

Reimagine the figure in fractional

Sometimes you will need to find the least common denominator first.

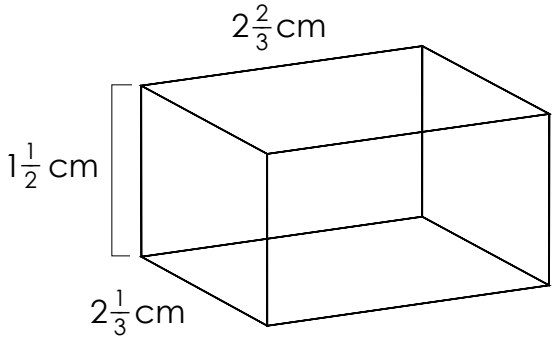

Convert dimensions using LCD:

$2\frac{4}{6} \times 1\frac{3}{6} \times 2\frac{2}{6}$.

Determine 6 × 6 × 6, or 216 $\frac{1}{6}$–cm cubes fit inside a 1–cm cube.

Reimagine dimensions in $\frac{1}{6}$-cm cubes:
16 × 9 × 14 = 2,016.
2,016 $\frac{1}{6}$-cm cubes × $\frac{1}{216}$ cm³ per cube = $9\frac{2}{6}$ cm³ volume.

When you do not need to visualize unit cubes, you can convert dimensions to improper fractions and use the volume formula instead.

$V = l \times w \times h$

$V = \frac{8}{3} \times \frac{7}{3} \times \frac{3}{2}$

$V = \frac{168}{18}$

$V = 9\frac{1}{3}$ cm³